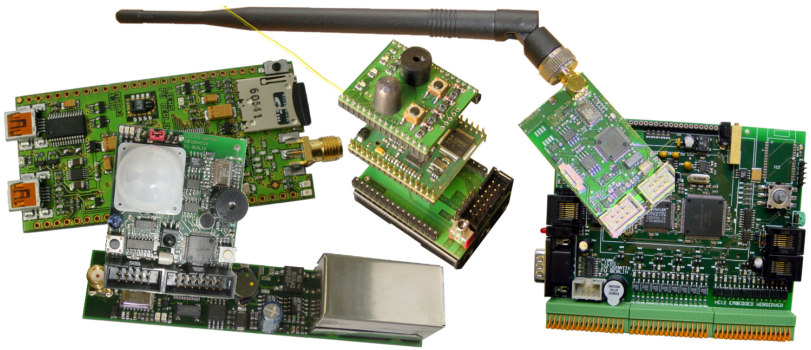

19589 - PS Telematik-Projekt: Wireless Embedded Systems

First Steps

Bastian Blywis

Department of Mathematics and Computer Science
Institute of Computer Science
15. April, 2009

Outline

- Slow CPU
- Small RAM and (Flash) ROM Memory
- Often times no MMU
- Limited energy resources
- FPU might be missing
- Specialized OS
- Difficult to debug

MSP430f1612

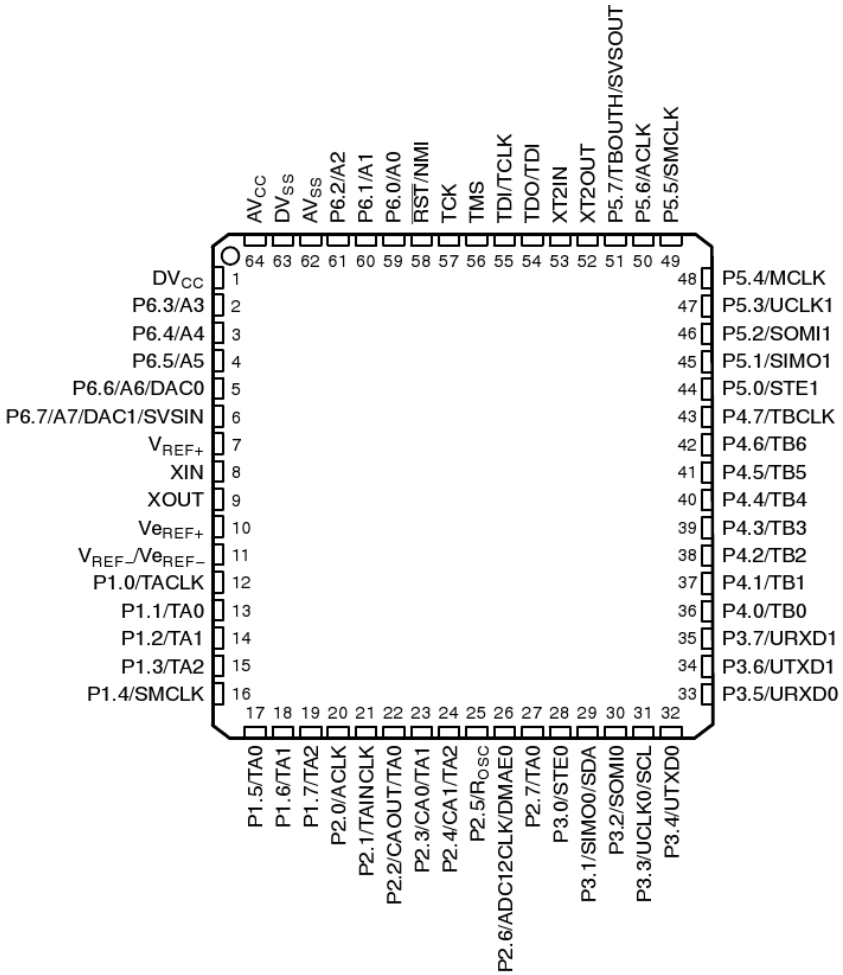

MSP430f1612 (internal)

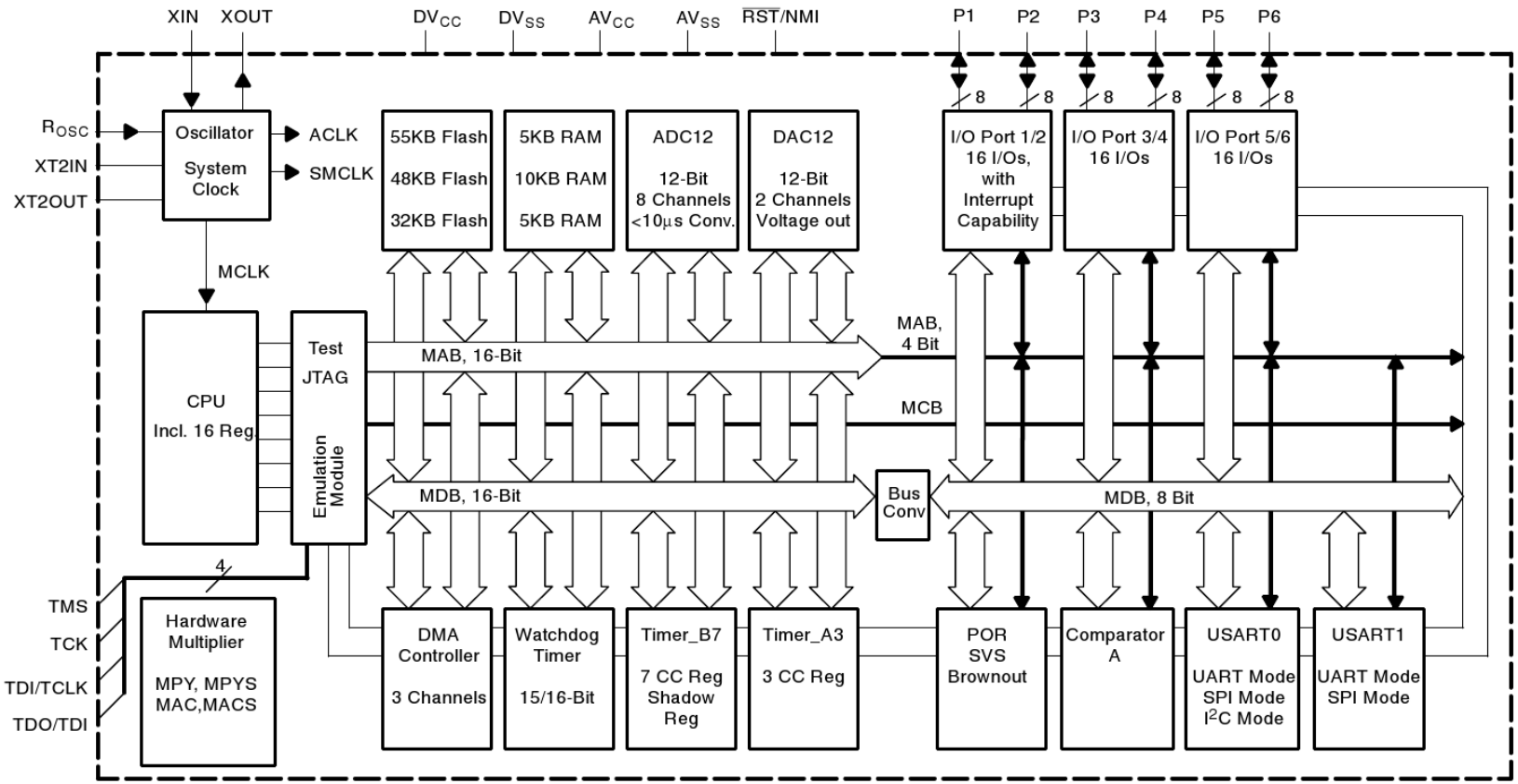

- Small operation system for the MSB-430. . .
- . . . but more or less a collection of source code
- Event driven
- No (preemptive) multitasking
- Microcontroller in low power mode most of the time (99%)
- User space applications use kernel functions via libscatterweb
- Documentation needs work

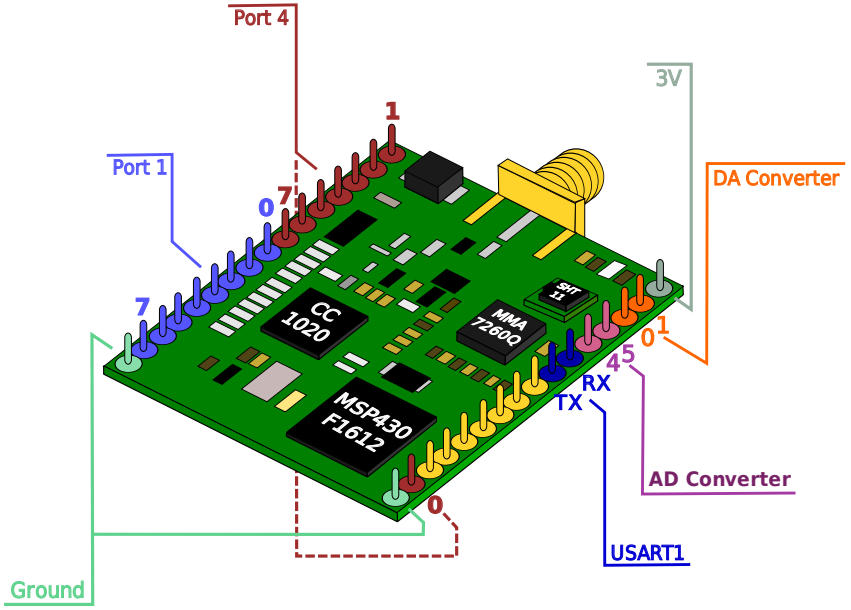

Software Architecture

- Hardware: Core module MSB-430
- Extension: MSB-430S
- OS kernel with drivers for core module. . .
- . . . and extension drivers (optional)
- Applications using kernel API (that's what you will develop)
- Applications using hardware directly (rare)

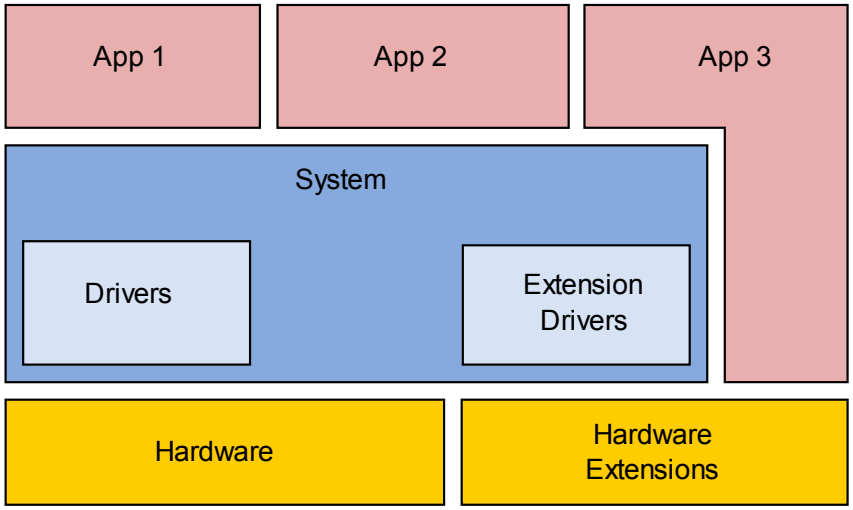

Event based system

1. System initially in low power mode
2. HW interrupt, e.g. voltage applied to I/O pin
3. CPU interrupts current program (if running)
4. registered interrupt service routine (ISR) in IVT gets called
5. ISR sets flag (depending on interrupt source)
6. ISR wakes up CPU
7. superloop detects set flag
8. registered event handler gets called → event handled
   - in kernel and/or
   - in user application
9. CPU reenters low power mode again

Debugging

- Limited
- Via JTAG interface (but doesn't work this well with MSPGCC)
- Write messages to serial out
- Configure MSB-430 via terminal commands

Example, logging:

```
printf( /* some text */, /* some arguments */ );
LOG_LOW( "PONG from %u", args->netheader->from );
```

Example, terminal command:

```
COMMAND(RST, 0, cmdargs) {
    System_reset(WDS_SWRESET);
}
```

Terminal Commands

Terminal commands can be invoked

- locally
- remote

Example, local:

```
$ id
[id] 57
```

Example, remote:

```
$ @123 id
[123] 123
```

Hardware

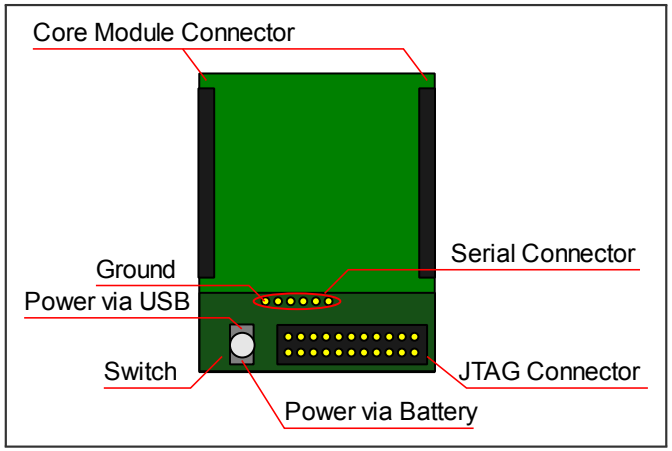

MSB-430T base module

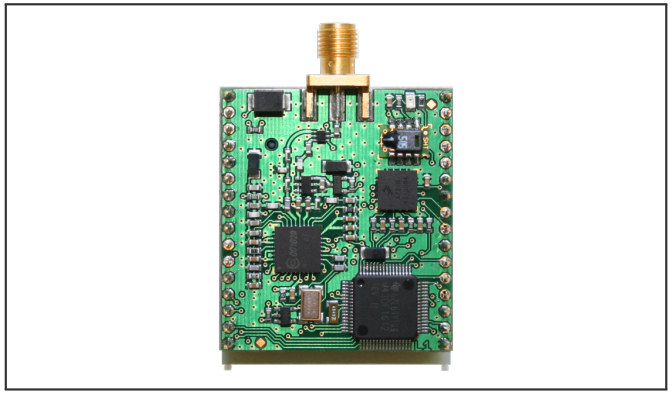

MSB-430

FTDI USB-to-Serial cable

JTAG Interface (USB)

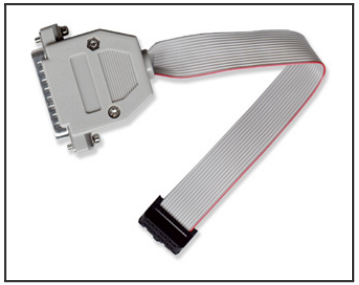

JTAG Interface (parallel)

Stacked Modules

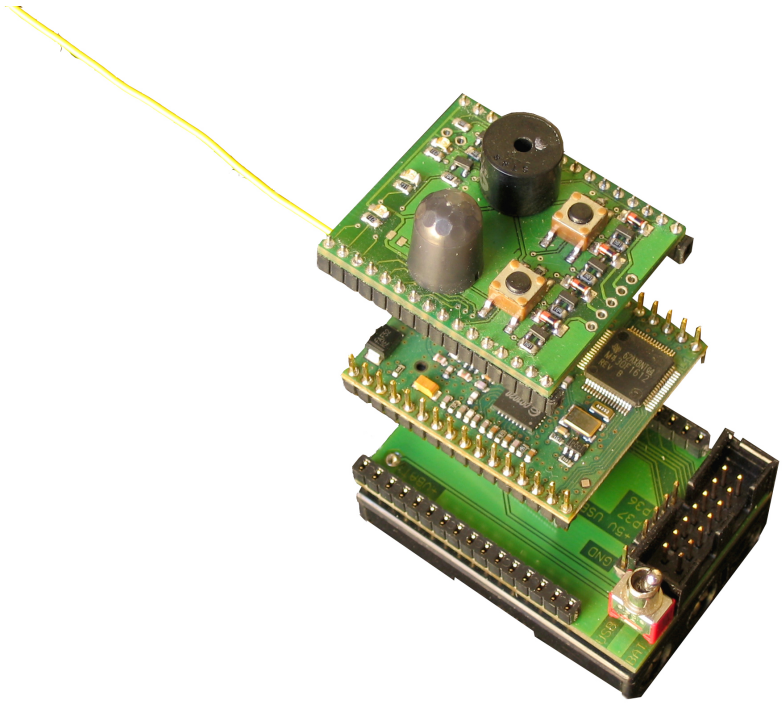

Stacked MSB Modules

First Steps

1. Open Cygwin Bash Shell
2. Download Source (do not use a windows network folder!!!)

```
$ cd SOME_DIR
$ mkdir SOME_NEW_DIR
$ svn co https://svn.mi.fu-berlin.de/scatterweb/...
...MSB-430/lab-branches/SS09/lab{1,2,3,4,5,6,7,8,9}
```

3. Make copy of [EMPTY] application

```
$ cd lab{1,2,3,4,5,6,7,8,9}/Applications
$ svn cp [EMPTY] first_steps
```

4. Compile application

```
$ cd first_steps
$ make
```

5. Flash to MSB-430

```
$ make flash
```

Terminal Emulator

1. Open a terminal emulator (e.g. TerraTerm, HyperTerminal, hterm)
   - 115200 Baud
   - Data Bits = 8
   - Parity = none
   - Stop Bits = 1
   - Flow Control = None
   - Send line ends with line feed (\r\n or cr-lf)
   - Local Echo = on
2. Reset device (use the hardware switch)
3. Toggle red LED

```
$ led 1
$ led 0
```

Write a Terminal Command

1. Open `src/ScatterWeb.Process.c`
2. Write a new terminal commando

```
COMMAND(HelloMSB, CMDFLAG_SERIAL, cmdargs) {
    printf("Hello User");
}
```

3. Implement a call counter

```
uint8_t counter = 0;

COMMAND(HelloMSB, CMDFLAG_SERIAL, cmdargs) {
    printf("Hello User - called %u times\r\n", counter++);
}
```

Parameter Parsing

- Parse a parameter

```
uint8_t counter = 0;

COMMAND(HelloMSB, CMDFLAG_SERIAL, cmdargs) {
    uint16_t n = String_parseUint16(cmdarg->args, NULL);
    while(n--) {
        printf("Hello User - called %u times", counter++);
    }
}
```

- You can use every function in the `stdlib`...
- ...unfortunately MSPGCC provides only a reduced `stdlib`

Timer

1. Call a function once 5 s after system start

```
void callMe() { /* some action */}

void Process_init() {
    System_registerCallback( C_RADIO, (fp_vp)Process_radioHandler );
    System_registerCallback( C_SENSOR, (fp_vp)Process_sensorHandler );
    Timers_add(5*1024, callMe, 0xFFFF);
}
```

2. Call a function every 5 s

```
void callMe() {
    print("foo bar");
    Timers_add(5*1024, callMe, 0xFFFF); // 1024 ticks == 1 second
}
```

3. View timer table with command `tmr`
4. Toggle the led in your periodic function

Sending Frames/Packets

1. Create header

```
netpacket_send_args_t npsargs;
Net_sendArgsInit(&npsargs);
```

2. Set necessary values

```
npsargs.netheader.to = ???; // choose a destination id
npsargs.netheader.type = USERDEFINED_PACKET+???; // choose a number
npsargs.netheader.flags = 0;
```

   Note: USERDEFINED_PACKET is defined in
   `Libraries/libscatterweb/include/ScatterWeb.Net.PacketTypes.h`
   Add your lab-number to the value to get a unique type id.

3. Add some data

```
uint8_t* data = "Hello world!";
npsargs.payload[0].buffer = (uint8_t*) data;
npsargs.payload[0].size = strlen(data)+1; // include terminating char
```

4. Send frame/packet

```
Net_send(&npsargs);
```

Receiving Frames/Packets

1. Goto `Process_radioHandler()`
2. Include case for your type

```
switch ( args->netheader->type ) {
    case PING_REQUEST_PACKET:
         Net_sendPong(args->netheader->from);
         break;
    case PING_REPLY_PACKET:
         LOG_LOW( "PONG from %u", args->netheader->from );
         break;
    case USERDEFINED_PACKET+???:
         // do something
         break;
    default:
         return false;
}
```

3. Test the sending and receiving of data with your two nodes

Tasks

Traffic Generator

- Write a command that can initiate and terminate the periodic sending of data.
- The interval shall be configurable as parameter.
- Limit the number of sent packets by another parameter.

Example: `genPackets start 0.5 1000`
(send a packet every 0.5 seconds and stop after 1000 packets)

Dump Network Traffic

- Write a command that switches on/off the dumping of received packets.
- Decode the header fields in your output.
- Enable promiscous mode; receive all packets and not only multicasts and unicast destined for your node

Example: `dump start`

```
From: 123
  To:  12
  Id:   3
  ...
```

End of the First Steps